DIABLO MIRROR

HI-TECH PARTS

Puig
Hi-Tech Parts

NEW!

Puig
Hi-Tech Parts

NEW!

ANTI-REFLECTIVE MIRROR

CONVEX MIRROR

Puig Hi-Tech Parts

MULTIPLE FUNCTIONS

DIMENSIONS

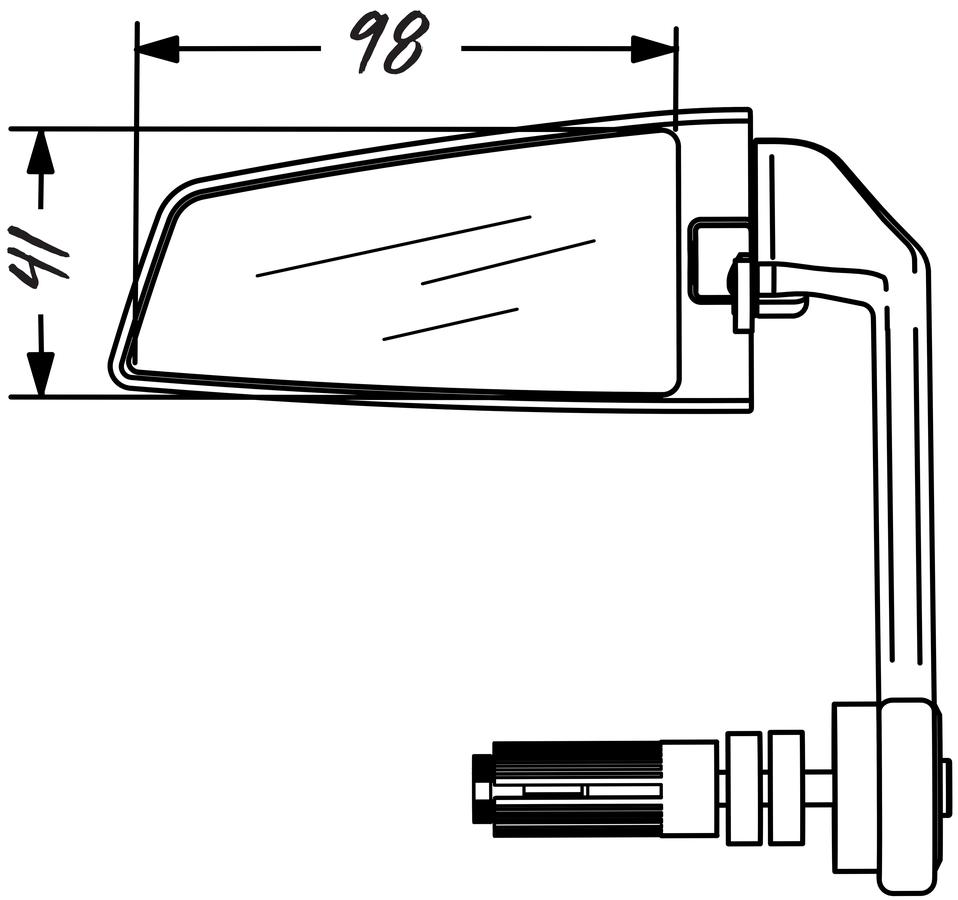

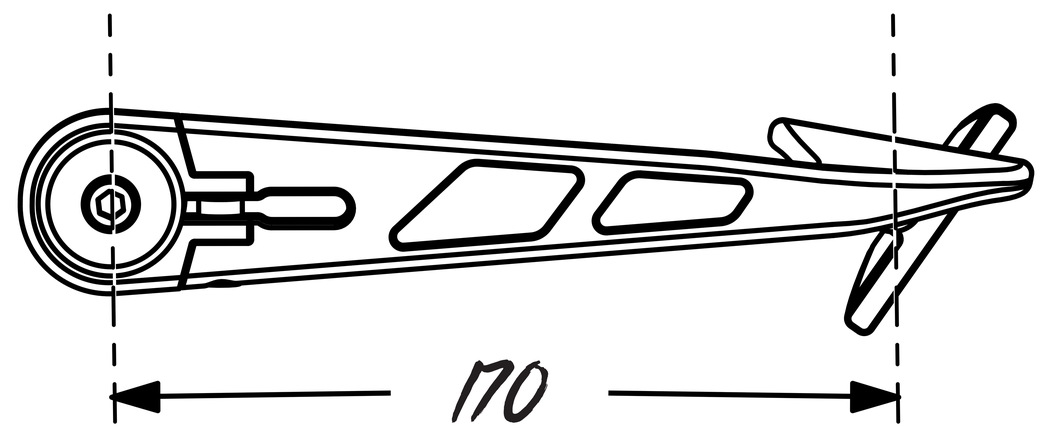

ADAPTABLE AND ADJUSTABLE

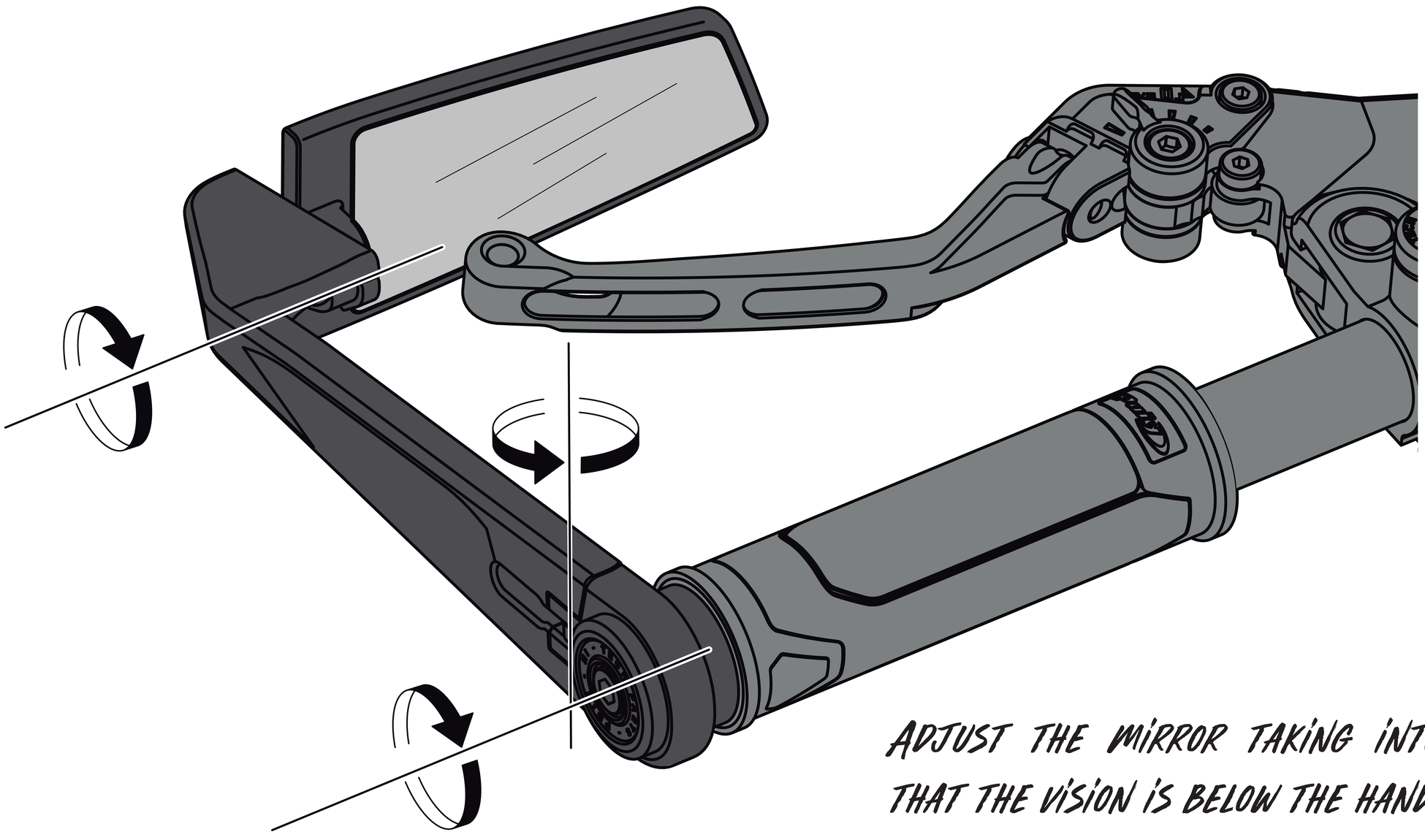

ADJUST THE MIRROR TAKING INTO ACCOUNT THAT THE VISION IS BELOW THE HANDLEBAR

Puig Hi-Tech Parts

Puig
Hi-Tech Parts

AVAILABLE IN:

BLACK

INFO@PUIG.TV
WWW.PUIGHITECHPARTS.COM

Puig
Hi-Tech Parts